Networking -- Subnetting

VISHWANATH M S

VISHWACLOUDLAB.ORG

Subnetting

Formulas for Subnetting

Since 32bit == Network Bits + Host Bits

Network bits = 32 – Host bits
Host bits = 32 – Network bits

For
Class A → N bit == 8 and H bit == 24
Class B → N bit == 16 and H bit == 16
Class C → N bit == 24 and H bit == 8

VISHWACLOUDLAB.ORG

Formula's for Binary Numbers

2^1 = 2	2^11 = 2048
2^2 = 4	2^12 = 4096
2^3 = 8	2^13 = 8192
2^4 = 16	2^14 = 16384
2^5 = 32	2^15 = 32768
2^6 = 64	2^16 = 65536
2^7 = 128	
2^8 =256	
2^9 = 512	
2^10 = 1024	

0 + 0 = 0

0 + 1 = 1

1 + 0 = 1

1 + 1 = 10

2^7	2^6	2^5	2^4	2^3	2^2	2^1	2^0
128	64	32	16	8	4	2	1

VISHWACLOUDLAB.ORG

Netid and Hostid with Default CLASS

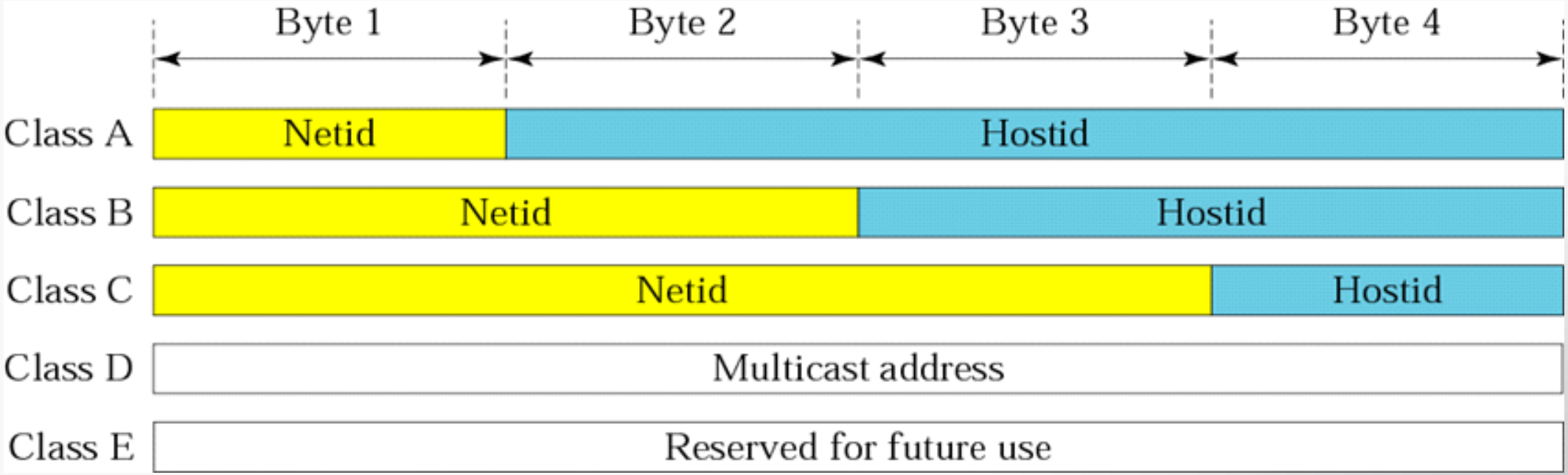

In classful addressing, an IP address in class A, B and C is divided into two parts netid and hostid. These parts are varying length, depending on the class of the address.

VISHWACLOUDLAB.ORG

Subnetting - Examples

Subnetting – Example – 172.18.0.0/16
1000 IP's per network, 6 Network.

Given is a Class B network which has 65536 (2^16) IP's by Default where in 16 bits are for HOST ID.

But we need to break this network into smaller networks with 1000 IP's (Hosts) in each network.

VISHWACLOUDLAB.ORG

Subnetting – Example – 172.18.0.0/16 1000 IP's per network, 6 Network

Example - 1

Solution:

2^**10** ~ 1000, Means ,

New No. of **H** bits = **10** ,

New No. of N bits = 32 – 10 = 22.

So, the First Subnetwork is → **172.18.0.0/22**

To find next network , we need to add binary "1" to the last bit of the Network bit.

2^7	2^6	2^5	2^4	2^3	2^2	2^1	2^0
128	64	32	16	8	4	2	1

VISHWACLOUDLAB.ORG

Subnetting – Example – 172.18.0.0/16 1000 IP's per network, 6 Network

Example - 1

Solution Continued …

In our example it would on the **"22"** bit for Network and we need add BINARY "1" at 22nd bit.

172.18. 0000 0000 .0/22 → 172.18.0.0/22 – 1st Subnetwork

- +1

172.18. 0000 0100 .0/22 → 172.18.4.0/22 – 2nd Subnetwork

- +1

172.18. 0000 1000 .0/22 → 172.18.8.0/22 – 3rd Subnetwork

- +1

172.18. 0000 1100 .0/22 → 172.18.12.0/22 – 4th Subnetwork

- +1

172.18. 0001 0000 .0/22 → 172.18.16.0/22 – 5th Subnetwork

:

:

:

172.18. 1111 1100 .0/22 → 172.18.252.0/22 – Last Subnetwork

Octets Range
1st – 1 – 8
2nd – 9 – 16
3rd – 17 – 24
4th – 25 - 32

0 + 0 = 0
0 + 1 = 1
1 + 0 = 1
1 + 1 = 10

2^7	2^6	2^5	2^4	2^3	2^2	2^1	2^0
128	64	32	16	8	4	2	1

VISHWACLOUDLAB.ORG

Host IP's in each subnetwork

Example - 1

172.18. 0000 0000 .0/22 → 172.18.0.0/22 – 1st Subnetwork

172.18. 0000 0000 .0 → 172.18.0.0 -- Network ID

172.18. 0000 0000 .00000001 → 172.18.0.1 -- First usable IP
172.18. 0000 0000 .11111111 → 172.18.0.255 -- usable IP
172.18. 0000 0001 .00000000 → 172.18.1.0 -- usable IP
172.18. 0000 0001 .11111111 → 172.18.1.255 -- usable IP
172.18. 0000 0010 .00000000 → 172.18.2.0 -- usable IP
172.18. 0000 0010 .11111111 → 172.18.2.255 -- usable IP
172.18. 0000 0011 .00000000 → 172.18.3.0 -- usable IP
172.18. 0000 0011 .11111110 → 172.18.3.254 -- Last usable IP

172.18. 0000 0011 .11111111 → 172.18.3.255 -- Broadcast IP

VISHWACLOUDLAB.ORG

Example - 1

Host IP's in each subnetwork

172.18. 0000 0000 .0/22	→ 172.18.0.0/22 – 1st Subnetwork	
172.18. 0000 0000 .0	→ 172.18.0.0	-- Network ID – First IP
172.18. 0000 0000 .00000001	→ 172.18.0.1	-- First usable IP
172.18. 0000 0011 .11111110	→ 172.18.3.254	-- Last usable IP
172.18. 0000 0011 .11111111	→ 172.18.3.255	-- **Broadcast IP – Last IP**
172.18. 0000 0100 .0/22	→ 172.18.4.0/22 – 2nd Subnetwork	
172.18. 0000 0100 .0	→ 172.18.4.0	-- Network ID – First IP
172.18. 0000 0100 .00000001	→ 172.18.4.1	-- First usable IP
172.18. 0000 0111 .11111110	→ 172.18.7.254	-- Last usable IP
172.18. 0000 0111 .11111111	→ 172.18.7.255	-- **Broadcast IP – Last IP**
172.18. 0000 1000 .0/22	→ 172.18.8.0/22 – 3rd Subnetwork	
172.18. 0000 1000 .0	→ 172.18.8.0	-- Network ID – First IP
172.18. 0000 1000 .00000001	→ 172.18.8.1	-- First usable IP
172.18. 0000 1011 .11111110	→ 172.18.11.254	-- Last usable IP
172.18. 0000 1011 .11111111	→ 172.18.11.255	-- **Broadcast IP – Last IP**

VISHWACLOUDLAB.ORG

Subnetting – Example – 172.18.0.0/16
500 IP's per network, 6 Network

Example - 2

2^9 ~ 500, Means , No of H bits = 9 , No of N bits = 32 – 9 = 23.

So, the First Subnetwork is → **172.18.0.0/23**

To find next network , we need to add binary "1" to the last bit of the Network bit.

In our example it would on the **"23"** bit

172.18. 0000 0000 .0/23 →

+1

172.18. 0000 0010 .0/23 → 172.18.2.0/23 – 2nd Subnetwork

+1

172.18. 0000 0100 .0/23 → 172.18.4.0/23 – 3rd Subnetwork

+1

172.18. 0000 0110 .0/23 → 172.18.6.0/23

+1

172.18. 0000 1000 .0/23 → 172.18.8.0/23

172.18. 1111 1110 .0/23 → 172.18.254.0/23 – Last Subnetwork

VISHWACLOUDLAB.ORG

Example - 1

Host IP's in each subnetwork

172.18. 0000 0000 .0/23	→ 172.18.0.0/23 – 1st Subnetwork	
172.18. 0000 0000 .0	→ 172.18.0.0	-- Network ID – First IP
172.18. 0000 0000 .00000001	→ 172.18.0.1	-- First usable IP
172.18. 0000 0001 .11111110	→ 172.18.1.254	-- Last usable IP
172.18. 0000 0001 .11111111	→ 172.18.1.255	-- **Broadcast IP – Last IP**
172.18. 0000 0010 .0/23	→ 172.18.2.0/23 – 2nd Subnetwork	
172.18. 0000 0010 .0	→ 172.18.2.0	-- Network ID – First IP
172.18. 0000 0010 .00000001	→ 172.18.2.1	-- First usable IP
172.18. 0000 0011 .11111110	→ 172.18.3.254	-- Last usable IP
172.18. 0000 0011 .11111111	→ 172.18.3.255	-- **Broadcast IP – Last IP**
172.18. 0000 0100 .0/23	→ 172.18.4.0/23 – 3rd Subnetwork	
172.18. 0000 0100 .0	→ 172.18.4.0	-- Network ID – First IP
172.18. 0000 0100 .00000001	→ 172.18.4.1	-- First usable IP
172.18. 0000 0101 .11111110	→ 172.18.5.254	-- Last usable IP
172.18. 0000 0101 .11111111	→ 172.18.5.255	-- **Broadcast IP – Last IP**

VISHWACLOUDLAB.ORG

CIDR

The Subnetworks created on the CLASSFULL (/8, /16 or /24 Default Subnets) are called as CIDR (CLASSLESS INTERDOMAIN ROUTING ADDRESS)

Eg: -- 172.18.0.0/23 or 172.18.4.0/23

VISHWACLOUDLAB.ORG

Subnetting – Example – 192.168.0.0/20
200 IP's per network, 6 Network

Example - 3

Solution:

200 ~ 2^8, No of new **H** bit = 8, No of New N bit = 32 -8 =**24**

192.168.0.0/24 → H

192.168.0000 0000.0/24 → 192.168.0.0/24 – 1st Subnetwork

+1

192.168.0000 0001.0/24 → 192.168.1.0/24 – 2nd Subnetwork

+1

192.168.0000 0010.0/24 → 192.168.2.0/24

+1

192.168.0000 0011.0/24 → 192.168.3.0/24

+1

192.168.0000 0100.0/24 → 192.168.4.0/24

……

192.168.0000 1111.0/24 → 192.168.15.0/24 – Last Subnetwork

VISHWACLOUDLAB.ORG

Subnetting – Example – 192.168.69.0/20
60 IP's per network, 6 Network

Example - 4

2 Steps

1. Validation

2. Subnetting

1. Validation of the given network.

192.168.0100 0101.0/20

The given network is inValid, because there are binary "1" after the line (on the HOST side), in the above.

Convert it to an VALID network ID by making all binary value as "0" on the HOST part.

192.168.0100 0000.0/20

The VALID network ID → 192.168.64.0/20

VISHWACLOUDLAB.ORG

Subnetting – Example – 192.168.64.0/20
60 IP's per network, 6 Network

Example - 4

60 ~ 2^6, No of new H bit = 6, No of New N bit = 32 -6 =**26**

192.168.64.0/26 H

192.168.0100 0000.0000 0000/26 → 192.168.64.0/26 – 1st Subnetwork

+1

192.168.0100 0000.0100 0000/26 → 192.168.64.64/26 – 2nd Subnetwork

+1

192.168.0100 0000.1000 0000/26 → 192.168.64.128/26

+1

192.168.0100 0000.1100 0000/26 → 192.168.64.192/26

+1

192.168.0100 0001.0000 0000/26 → 192.168.65.0/26

192.168.0100 1111.1100 0000/26 → 192.168.79.192/26 – Last Subnetwork

VISHWACLOUDLAB.ORG

Valid the Networks

Find whether the below Networks are Valid or NOT!!!!!

10.40.30.0/18 -- ??

10.40.00 011110 . 0/18 – INVALID Network
10.40.00 000000.0/18 – NOW VALID

170.100.40.0/21 -- ??
170.100.00101 **000.0/21 – VALID NW**
200.200.200.0/27 -- ??

200.200.200.000 00000 – VALID NW

VISHWACLOUDLAB.ORG

Subnetting – Example – 172.18.64.0/18
350 IP's per network, 6 Network

Example - 5

2 Steps

1. Validation

2. Subnetting

Validation of the given network.

172.18.01|00 0000.0/18

The given network is Valid, because there are no binary "1" after the line, in the above.

172.18.01|01 0000.0/18 → This network is not , bcz there is a binary "1" after the subnet mask (18). To make is valid, change all the binary bits to "0" after "18" (the line) bit.

VISHWACLOUDLAB.ORG

Subnetting – Example – 172.18.64.0/18
350 IP's per network, 6 Network

Example - 5

350 ~ 2^9, No of new H bit= 9, no of New N bit = 32-9 =23

172.18.64.0/23

172.18.0100 0000.0/23 → 172.18.64.0/23 – 1st Subnetwork

+1

172.18.0100 0010.0/23 → 172.18.66.0/23 – 2nd Subnetwork

+1

172.18.0100 0100.0/23 → 172.18.68.0/23

172.18.0111111 0.0/23 → 172.18.126.0/23 – Last Subnetwork

In AWS – 172.18.64.0/18 – is called the VPC CIDR or Main network

In AZure – 172.18.64.0/18 – is called the VirtualNetwork address space or Main network

In GCP – 172.18.64.0/18 – is called the VPC CIDR or Main network

VISHWACLOUDLAB.ORG

Is Subnetting solution for IPV4 address shortage?

NO….

Because

We initially had total of approx. “2M” network with the “CLASS” approach

After subnetting we increase that to approx. “800M to 900M” small networks to manage the show.

But Currently we are having approx. … **“20 Billion” Devices online**

How do we take care of this???

VISHWACLOUDLAB.ORG

Is Subnetting solution for IPV4 address shortage?

To solve the Growing demand of Public IP, IPV6 is the perfect solution

But we are still in the PROCESS of migrating ALL the APPLICATIONS FROM IPV4 to IPV6, which is taking an long time (25 yrs…. And Still we are doing it).

And interim solution to work on IPV4 was to DIVIDED the IPV4 address into **“PRIVATE”** and **“PUBLIC”.**

Private IPV4

Class A – 10.0.0.0 to 10.255.255.255

Class B – 172.16.0.0 to 172.31.255.255

Class C – 192.168.0.0 to 192.168.255.255

VISHWACLOUDLAB.ORG

NATTING and PATTING

PATTING → Converting "Many Private IP" to "one PUBLIC IP"

Means, all the traffic from "192.168.0.0/24" to the internet will use the public IP "100.100.10.21" as the IP to communicate on the INTERNET.

Note: - Any packet in the internet should have Source IP and Destination IP as PUBLIC IP.

NATTING → Converting "one Private IP" to "One Public IP"

This is used for HIDDING the Hosting servers in the Private segment from the attacker on the internet.

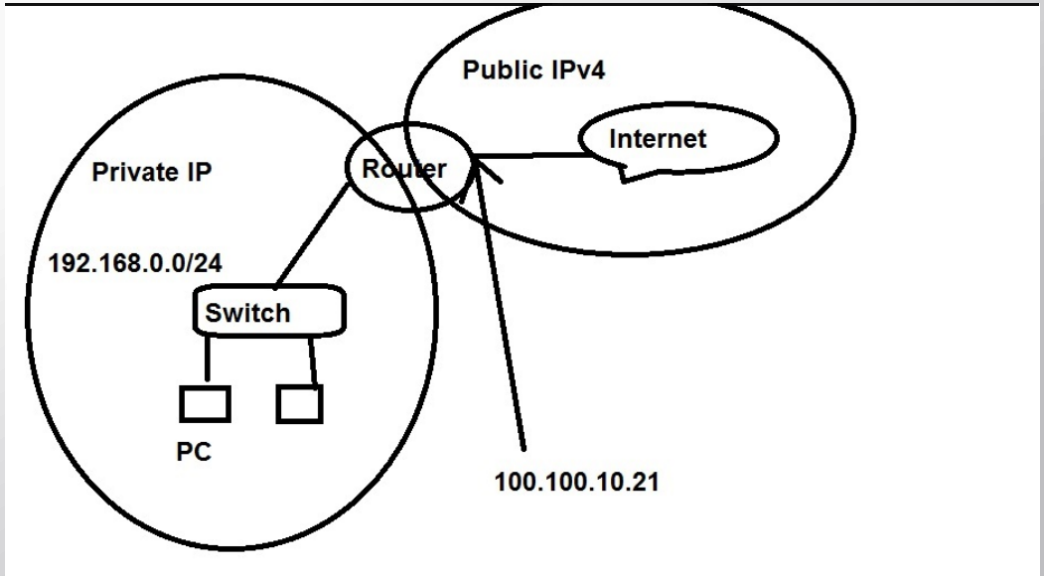

VISHWACLOUDLAB.ORG

IPV4 Address details

Public IPV4's range

0.0.0.0 to 9.255.255.255

11.0.0.0 to 126.255.255.255

128.0.0.0 to 169.253.255.255

169.255.255.255 to 172.15.255.255

172.32.0.0 to 192.167.255.255

192.169.0.0 to 223.255.255.255

Loopback IP

127.0.0.0 to 127.255.255.255

APIPA

169.254.0.0 to 169.254.255.255

VISHWACLOUDLAB.ORG

Steps in Choosing IP address

1. Find the main CIDR
   1. Find the MAIN CIDR Subnet mask
   2. Choose the IP address range
   3. Validate the above IP address range
2. Create the Subnets

VISHWACLOUDLAB.ORG

Choosing your OWN Network

Choose a network that can have **300 IP's per network and we would need min of 10 networks.**

Solution:

300 ~ 2^9 = 512 → 9 is the Host bits for every Subnetwork.

10 ~ 2^4 = 16 → 4 bits

Main CIDR , no of H bits == 9 + 4 == 13.

NW bit for main CIDR == 32 – H == 32 – 13 == 19

Eg: -- 192.168.33.0/19 – Here the IP is assumed

192.168.001 00001.0/19 – This is INVALID network,

192.168.001 00000.0/19 -- 192.168.32.0/19 →THIS IS VALID NW

VISHWACLOUDLAB.ORG

Subnetting – Example – 192.168.32.0/19
300 IP's per network, 10 Network

Example - 6

300 ~ 2^9, No of new H bit = 9, No of New N bit = 32 - 9 =**23**

192.168.32.0/23 → H

192.168.001 00000.0000 0000/23 → 192.168.32.0/23 – 1st Subnetwork

+1

192.168.001 00010.0000 0000/23 → 192.168.34.0/23 – 2nd Subnetwork

+1

192.168.001 00100.0000 0000/23 → 192.168.36.0/23

+1

192.168.001 00110.0000 0000/23 → 192.168.38.0/23

+1

192.168.001 01000.0000 0000/23 → 192.168.40.0/23

192.168.001 11110.0000 0000/23 → 192.168.62.0/23 – Last Subnetwork

VISHWACLOUDLAB.ORG